rimpmaster

CM32MD-24V

DIE SET TABLE CM32MD-24V

Die #	Crimp.range	D	L
10*	10.0-12.0	10*	60
12*	12.0-14.0	12*	60
14	14.0-16.0	14	60
16	16.0-19.0	16	60
19	19.0-22.0	19	60
22	22.0-26.0	22	75
26	26.0-30.0	26	75
30	30.0-34.0	30	75
34	34.0-39.0	34	80
39	39.0-45.0	39	80
45	45.0-51.0	45	90
51	51.0-57.0	51	90
57	57.0-63.0	57	100
63	63.0-69.0	63	100
69	69.0-74.0	69	100
74*	74.0-78.0	74*	110
78*	78.0-84.0	78*	110

Benefit:

Digital Precision Control
Compact & Robust Design
Optional Quick Change Tool & Die Rack
TUV CE Approved

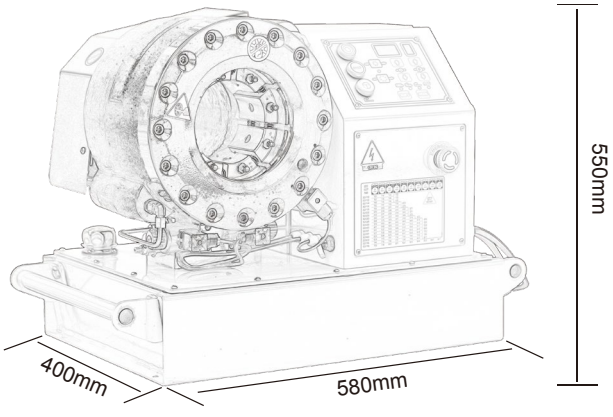

Main Specification	CM32MD-24V
Max Hydraulic Hose	2'' 4SP
Crimping Range mm	4-87
Die Type	P32
Master Die Length mm	80
Max Opening mm	+32
Motor KW	3KW 24V DC
Crimping Force KN	2200
Control	Digital Control
Foot pedal	Optional
Die Rack	Optional
Quick Change Tool	Optional
Backstop Device	Optional
Control by Pressure	Optional
Noise Level dBA	65
Protection Class	IP56
L*W*H mm	580*400*550
Weight KG	220

Hydrauli Connect